Material			
No.	Plan	Article	Quantity
1	YP02048	1891254	1
| 2	YP02108	1893954	1
3	Y06560	1575054	2
| 4	YP02231	1894954	1
5	---	2990455	2
6	---	2990592	1
7	---	2990593	1
8	YP02222	18948..	1
9	---	1002399	0,94 m
10	M6-DIN125A	1001564	4
11	M6x12-ISO7380	1007000	4
12	YP02160	1893554	4
13	YP02159	1893454	4
14	M6x20-ISO7380	1006999	4
15	M8x20-ISO7380	1001580	3
16	Y006559	1995662	2
17	---	2990351	2
18	D10x40	1991481	1

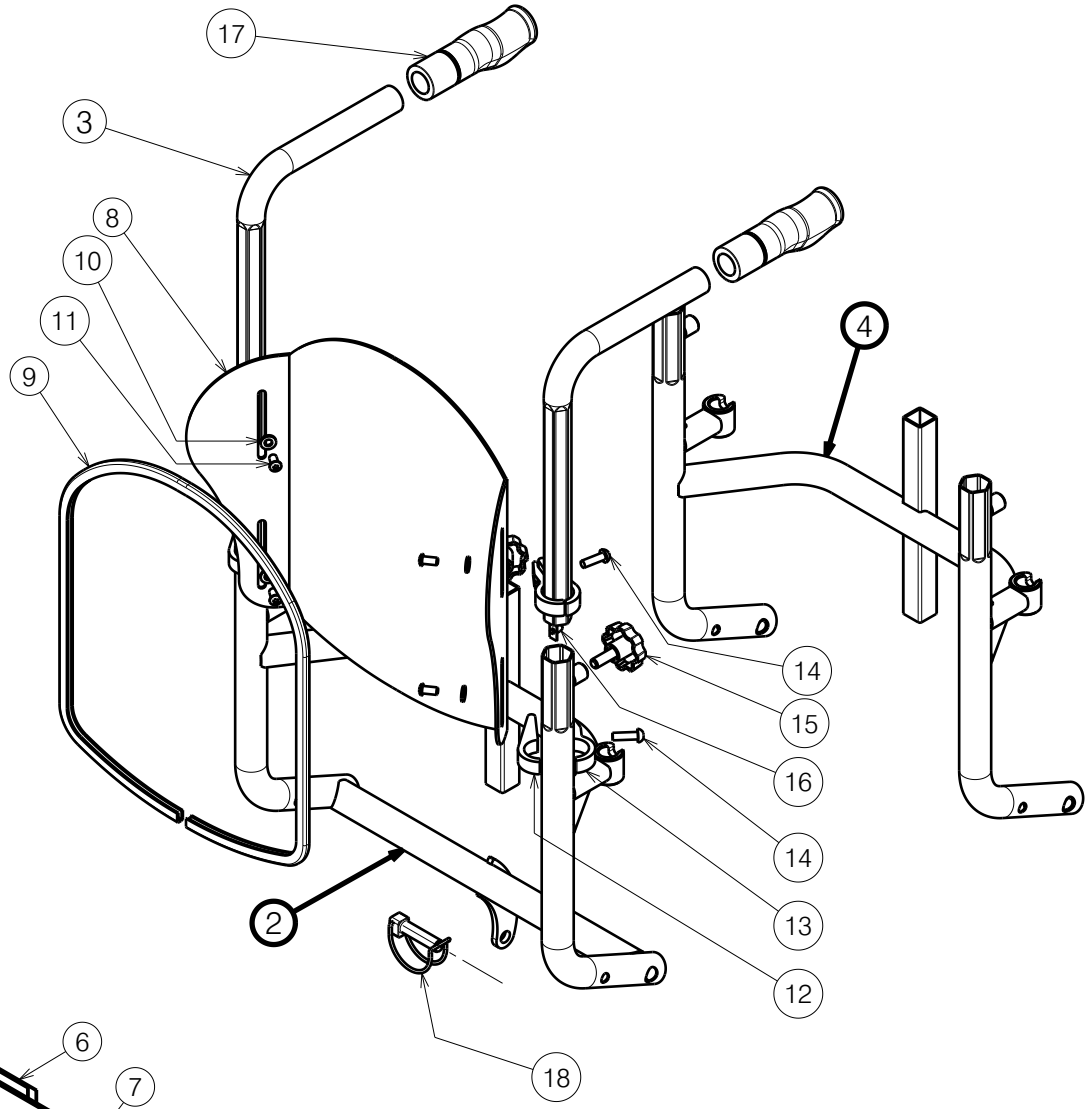

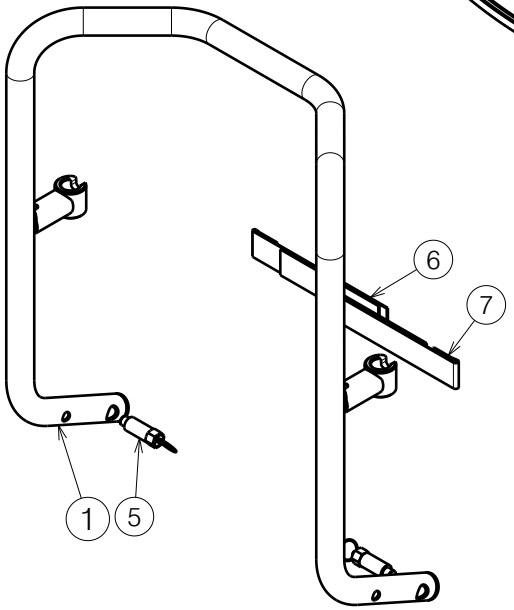

NOTICE: THE INFORMATION CONTAINED ON THIS DRAWING IS PROPRIETARY TO VERMEIREN GROUP AND SHALL NOT BE DISCLOSED IN WHOLE OR IN PART, OR USED FOR ANY DESIGN OR MANUFACTURE, EXCEPT WHEN SUCH USER POSSESSES DIRECT WRITTEN AUTHORISATION FROM VERMEIREN GROUP

BACK FRAME | FOREST 2/37

Plan No. EP00098/ B

Scale: 1:6	Drafted	Verified	Confirmed
Date	12/12/2012	23/09/2024	23/09/2024
Initials	BS	PM	MK

VERMEIREN

EP00098 / B